Operating manual

TINY CX



a **Look Solutions** product

Set of Equipment supplied

– 1 **Tiny CX** incl. fluid tank
– 1 battery
– 1 charger
– 1 bottle of fluid (250 milliliter)
– 1 case

When the order includes a cable remote or radio remote, the following items are supplied additionally:

– 1 remote control with cable
– 1 receiver with stereo jack
– 1 transmitter
– 1 instruction manual "Radio remote control"

Please check whether all ordered products are supplied.

Original operating manual, version 04/2021

Contents

1. Procedure of the Tiny CX **4**

2. Safety Instructions **5**

3. Descriptions of the parts **6**

4. Fluid **8**
4.1 General

5. Operating the Tiny CX **8**
5.1 Selecting the Location 8
5.2 Mounting the Tiny CX 8
5.3 Starting-up the Tiny CX 9
5.4 Programming of a fixed fogging time 9
5.4.1 Programming the fogging time
5.4.2 Deleting a fixed fogging time
5.5 Status Display of the battery 10
5.6 Wiring of connectors 10

6. The rechargeable Battery **11**
6.1 General 11
6.2 Capacity and life time 11
6.3 Operating and Storing 11
6.4 Charging the battery-pack 11
6.5 Fuse 12
6.6 Safety Instructions 12
6.7 Technical Data 13

7. Service and Maintenance **14**
7.1 Changing the Vaporizer 14
7.1.1 Removal of the Vaporizer
7.1.2 Installation of the Vaporizer
7.1.3 Calibrating the Vaporizer
7.2 If the machine does not work perfectly 16
7.2.1 There will be no fog if...
7.2.2 Status and error display
7.3 Care and Maintenance 17

8. Technical Data **18**

9. Warranty Conditions **19**

1. Procedure of the Tiny CX

The **Tiny CX** is a battery-powered, microprocessor-controlled mini fog generator. It is based (as most fog generators are) on the vaporizer principle, i.e. a glycol fluid is evaporated and condenses into fog when leaving the fog nozzle. However, the **Tiny CX** only heats when fog is actually produced.

The machine switches off automatically after approx. one minute. Thus, the electronics of the **Tiny CX** does not use any current.

If the receiver of the radio remote is connected to the machine, some current will be needed. **Please note**: Thus, the battery can be destroyed by completely discharging and cannot be used anymore!

Generally the battery must be disconnected and regularly recharged (at least every 6 months) if the machine will be not in use or stored for a longer period.

When emitting fog a strong current of 5 to 6 A runs with peak levels of 12 to 13 A.

The following sequence produces fog:

a) Warm up (1 second, without pumping fluid).
b) The pump runs
c) Post-run mode (15 seconds to vaporize the fluid remaining in the vaporizer).

In the post-run mode the fogging process can be started via the start button in the lid or via the start button on the cable remote or radio remote.

2. Safety instructions

A fog machine is not a toy!

- Very hot steam escapes from the nozzle. Risk of scalding.
- Occasionally very hot droplets of fluid may escape when in operation.
  Thus never aim at persons directly and keep a minimum distance of 3 m to the nozzle.
- Never touch the nozzle when in operation. Risk of getting burnt.
- The location for the machine must be non-flammable, non-combustible and not sensitive to heat. Its surface area has to be twice as big as the machine.
- Keep a minimum distance of 60 cm to all flammable, combustible objects and objects sensitive to heat.
- Glycol is alcohol and burns with a slightly bluish, almost invisible flame. Never point the fog at strong sources of ignition like fire or pyrotechnic effects.
- Never open the machine and leave it unattended when connected to a power supply.
- The visibility has to be more than 2 m in rooms where people walk around.
- Only use the supplied Tiny-Fluid. Different types of fluid do not generate the fog you require and will damage your fog generator.
- Do not swallow the fog fluid. Keep it away from children. In case of eye contact, rinse well with water. Consult a doctor should you accidentally swallowed some fluid.
- Spilled fluid or splashed fluid droplets can cause a slip hazard. Mop up the fluid and dispose of it according to regulations. Tiny-Fluid is completely water-soluble and biodegradable.
- Fog may activate smoke detectors.

Artificially-made fog can be produced in many different ways. The method used here to produce fog, with a device which works according to the vaporizer principle, is the most harmless one.

No case has so far been reported in which a healthy human being has been harmed because of using our device to produce artificial fog. However, this can only be guaranteed if the professional fog generators are used appropiately, i.e. at the correct vaporization temperatures as well as with the correctly mixed fog fluid.

We, however, recommend: People with health problems or problems of the respiratory tract or with an inclination for allergies should avoid any contact with artificially-made fog.

3. Description of the Parts

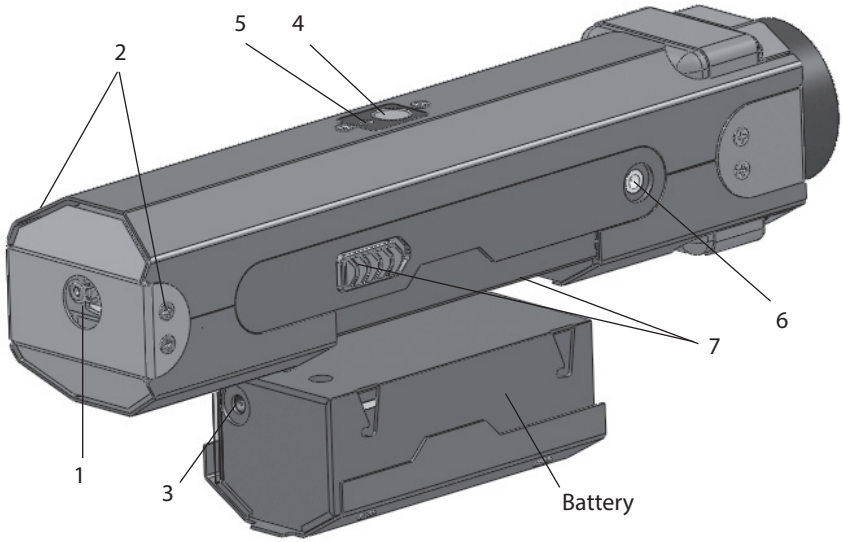

1: Fog nozzle
2: Screws to unscrew the stainless steel hood
3: Connector for Charger
4: Start button
5: Yellow LED
6: Socket for connecting the cable of the control panel or the receiver of the radio remote
7: Pusher to disconnect the battery
8: Calibrating button to calibrate the vaporizer

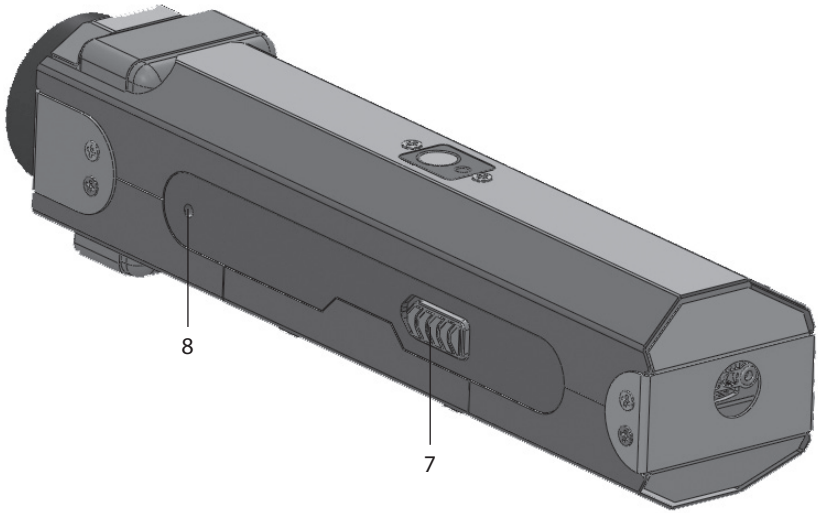

3. Description of the Parts

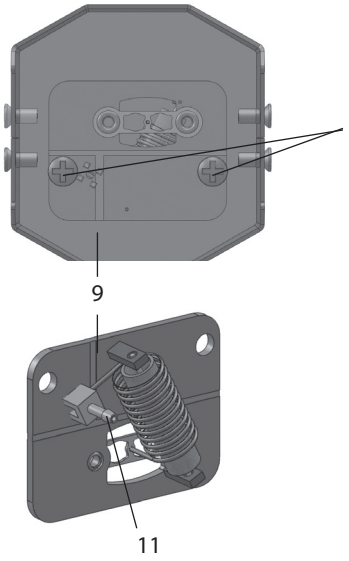

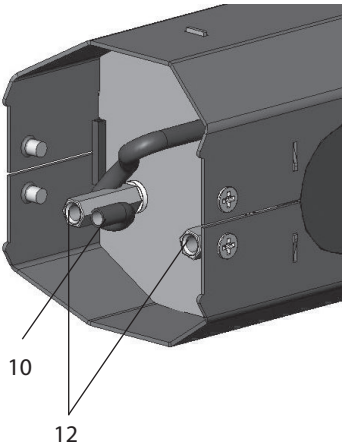

9: Vaporizer
10: Fluid tube
11: Tubing spout
12: Connecting pins for vaporizer

Cable remote (option)

• Start button

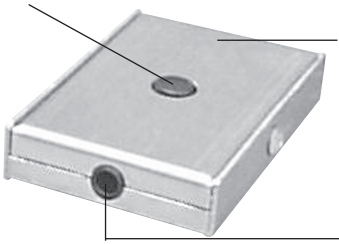

4. Fluid

4.1 General

The **Tiny CX** is built to be used with original Look Tiny-Fluid. Use of other liquids will clog the vaporizer and void the warranty.

Note: If the **Tiny CX** will not be in use for a long period, please empty the fluid tank and pour the fluid back into the original fluid bottle.

5. Operating the Tiny CX

5.1 Selecting the Location

The location for the **Tiny CX** must

- be dry
- guarantee sufficient air supply
- be at least 60 cm from inflammable materials
- have very little vibration
- have an ambient operating temperature between 5° C and 45° C
- have a relative air humidity of less than 80%.

5.2 Mounting the Tiny CX

If the **Tiny CX** is to be built into props or similar, make sure that a fog-free air supply is guaranteed. Too high a fog concentration can condense inside the machine and can result in damages caused by moisture.

When installing the **Tiny CX** make sure that

- no fog is passed back into the fog generator,
- no condensed fluid runs into the apparatus,
- the air vents [1] are not covered or concealed,
- no objects protrude into the fog nozzle [2]. This may destroy the vaporizer.

5.3 Starting up

a) Pour the Tiny-Fluid into the fluid tank and firmly close the lid. Check the cleanliness of the fluid tank, so that no dirt (fluff etc.) can be sucked in by the pump. Even the smallest impurity immediately leads to clogging of the machine.

b) Insert the battery into the machine until it clicks into place.

To disconnect the battery, pull the two silver pusher [7] at the sides of the machine coeval in the direction of the fluid tank. The battery unlocks and slides out.

Please note: To avoid complete discharge of the battery during long storage periods, the battery has to be disconnect from the machine and has to be recharged regularly (at least every 6 months)!

c) Press the start button in the lid of the machine [4]. After approx. 1 second the unit generates fog as long as the button is hold.
If you would like to control the machine via the cable remote or radio remote (both as an option), connect the control cable for the remote or the receiver of the radio remote to the machine. You can start the fogging process by pressing the start button at the cable remote or radio remote.

Caution: Do not put anything into the fog nozzle. This may destroy the vaporizer and it then has to be changed.

If the **Tiny CX** is not generating fog, the machine switches off automatically after approx. 1 minute. The yellow LED [5] does not light anymore. The machine can still be activated at any time by pressing the start button in the machines lid, the cable remote or the radio remote.

5.4 Programming a fixed fogging time

(only if an optional cable remote or radio remote is supplied)

For some applications it will be useful to program in a fixed fog amount, which can be easily reproduced later.

The shortest fog time is pre-programmed. If a new fog time is programmed, the pre-programmed fog time will be deleted.

5.4.1 Programming the fogging time

a) Insert the battery and connect the cable remote or the receiver of the radio remote to the machine.

b) Press and hold the start button in the machines lid [4]. When the requested fogging time is reached, press and release the start button at the cable remote or one of the buttons at the transmitter of the radio remote to confirm the fogging period. Now the fogging time is saved and the start button in the machines lid [4] can be released.

The microprocessor saves the fogging time and this programmed fogging time can now be recalled by **pressing the start button on the cable remote or at the transmitter of the**

radio remote (option) **momentarily** provided no new fogging period has been programmed in or not.

The programmed fogging time cannot be recalled by pressing the start button in the machines lid [4]. If the start button in the lid is pressed, the **Tiny CX** will produce fog as long as the button is held down, regardless of whether a fogging time has been programmed in.

5.4.2 Deleting a programmed fogging time

The programmed fogging time can be deleted in the following way. Therefor insert the battery and connect the cable remote or the receiver of the radio remote to the machine.

- Press the start button in the machines lid [4] momentarily and press the start button on the cable remote or on the transmitter of the cable remote for confirmation. The programmed fogging time is now deleted.

The **Tiny CX** now produces fog for as long as the start button in the machines lid [4], on the cable remote or the transmitter of the radio remote is held down.

5.5 Battery Status Display

The yellow LED [5] on the **Tiny CX** indicates (among other things (see point 7.2)) how strong the battery still is and/or when it may need to be recharged.

1) LED flashes slowly:
   Battery capacity of 15% – 100%, the battery is fully operational
2) LED flashes fast:
   Battery capacity below 15% – the battery should be changed and/or charged.
3) LED lights up permanently:
   The battery is flat

5.6 Wiring of Connectors

Mini-Stereo jack plug:
Sleeve = Ground, Ring = switch on/off, Tip = 11.1 V DC (+) output

6. The Battery

6.1 General

The supplied battery is a maintenance-free 11.1V Lithium-Ion battery. It can be used in any position.

The connection to the charger is established by a low volt plug at the charger.

6.2 Capacity and Lifetime

The battery has a capacity of 1.5 Ah and is supplied in a 50% charged status.

Charge the battery before using it the first time with the supplied charger. Please note the operating instructions of the charger (see point 7.1).

A fully-charged battery can generate more than 150 fog emissions of 4-5 seconds. The permanent fogging time amounts to 10 minutes.

The battery will lose its capacity with use and will wear out after approximately two or three years.

6.3 Operating and Storing

Lithium-Ion batteries are modern energy suppliers with huge capacity, small dimensions and light weight. Due to its high energy seal and the materials used these batteries may be harmful. Therefore please read the safety instructions carefully (see point 6.6)!

Optimal storage of the fully charged battery at 15°C and an air humidity of 45 - 85%.

If the battery will not be used for a long time it must be recharged regularly (at least every six month).

6.4 Charging the Battery

For charging the battery please use the supplied automatic charger. A discharged battery can be charged within 2 hours.

– Disconnect the battery from the machine. Therefor pull the two silver pusher [7] at the sides of the machine coeval in the direction of the fluid tank. The battery unlocks and slides out. Make sure that the battery does not fall down from a high height and also does not pitch on hard surfaces!
– Connect the charger to a power socket (100-240 V/50Hz–60Hz).
– Connect the output line of the charger to the battery.

The Charge-LED lights as long as the battery is charging.

6. The Battery

When the battery is fully charged, the Charge-LED will extinguish or change its colour, depending on what type of charger is delivered.
– Disconnect the charger from the battery.

Recharge the battery of the **Tiny CX** after each use, or, when the yellow control-LED in the machines lid [5] flashes fast, recharge immediately.

Avoid complete discharge (control-LED does not light at all) because this will cause irreversible damage to the battery.

Lithium-Ion batteries must only be recharged and stored on fireproofed and non-flammable surfaces! The battery must not be recharged unsupervised.
The ambient operating temperature while charging should be between 10°C and 40°C.

6.5 Fuse

To avoid overcurrent, the battery is equipped with a 7.5 A Miniblade-fuse [7]. This fuse has to be replaced if it blows.

6.6 Safety Regulations

– Keep away from children
– Do not heat up over 60°C (for example by sun exposure) or expose to fire
– Keep away from moisture
– Do not short-circuit
– Do not dismantle or deform
– Do not use defective or deformed battery-packs

Batteries can leak or be damaged if used incorrectly.
In some extreme cases, there is danger of:

– Fire
– Explosion
– Smoke- and gas exposure

In this event, please note:

– If there is no suitable extinguisher available, let the battery burn down and avoid breathing the fumes
– To extinguish the fire use sand or a fire extinguisher filled with powder only

6. The Battery

– Never use water to put out the fire. Danger of explosion!
– If the electrolyte inside the battery comes into contact with skin or eyes, immediately rinse with water or consult a doctor.

6.7 Technical Data

Model	Lithium-Ion battery
Output voltage	11.1 V
Capacity	1500 mAh
Temperature range	10° C to 40° C
Fuse	7.5 A Miniblade, Art. No. 40177
Dimensions	10.5 x 4.4 x 4.1 cm
Weight	200 g

7. Service and Maintenance

7.1 Changing the Vaporizer

The micro vaporizer especially developed for the **Tiny CX** has a limited working life. Depending on application duration, the fogging output will reduce after a while and the vaporizer will need to be changed.

7.1.1 Removal of the Vaporizer

a) Separate the **Tiny CX** from the battery. Therefor pull the two silver pusher [7] at the sides of the machine coeval in the direction of the fluid tank. The battery unlocks and slides out.

b) Unscrew the four screws [2] with a suitable screwdriver to release the stainless steel hood.

c) Remove the stainless steel hood.

d) Unscrew the two screws [13] at the vaporizer with a suitable screwdriver.

e) Slide out the vaporizer [9] forwards.

f) Remove the fluid tube [10] from the tubing spout [11] of the vaporizer. If the tubing does not come off, you can pull on it with a pair of small pliers or a similar tool.

g) Clean the interior of the unit with an absorbant, fluff-free cloth.

7.1.2 Installation of the Vaporizer

a) Plug the fluid tube [10] onto the tubing spout [11] of the new vaporizer.

b) Mount the new vaporizer to the connecting pins [12] with the two screws [13].

c) Check the connections and make sure that the fluid tubing is not twisted or bent.

d) Mount the stainless steel hood with the four screws [2] at the machines cover. Ensure that the hood engages into the corresponding guide groove of the lid part.

7.1.3 Calibrating the Vaporizer

Since all vaporizers have different electrical qualities, the **Tiny CX** must be recalibrated after every exchange of the vaporizer.

IMPORTANT: During the calibration process the vaporizer temperature must be at 20° C. Never start fogging before the calibrating process. Too cold or too warm units must first adapt to the room temperature (20° C).

a) Insert the battery into the machine until it clicks into place.
Please note: Do **not** switch on the machine by pressing the start button in the machines lid. If the LED is flashing wait until the machine switches off and the LED stop flashing (approx. 1 minute).

b) Press the calibration button (cal) [8] at the side of the machine with a small screwdriver or something similar.
The calibrating process now starts automatically. The yellow LED [5] flashes six times with a short pause after the second and the fourth flash to confirm the calibration.



c) The calibration process is now complete.

7. Service and Maintenance

7.2 If the machine does not work perfectly

7.2.1 There will be no fog, if...

- the battery is discharged (yellow charge indicator (LED) [5] lights up permanently, the pump automatically cuts off) => charge the battery
- the fluid tank or the fluid tubing is empty or the connecting spout of the fluid tubing is not correctly plugged into the quick connector on the fluid tank
  => refill the fluid tank, check to see that the tubing plug is properly connected to the quick connector
- the vaporizer is clogged or broken => change the vaporizer (see point 7.1)

7.2.2 Status and error display

The yellow LED [5]

- flashes once



  Battery status display: if the LED flashes slowly, the battery is well charged, if the LED flashes quickly the battery has to be recharged.

- flashes twice in a row



  Vaporizer is broken: change the vaporizer as described in point 7.1.
  Important: The new vaporizer must be calibrated!

- flashes five times in a row



  Vaporizer cannot be calibrated: Try once again to calibrate the vaporizer as explained in point 7.1. If this should not help, the vaporizer is broken and cannot be used.

- lights permanently



  The battery is completely discharged: recharge the battery.

7.3 Care and Maintenance

To ensure optimal performance of the **Tiny CX**, you should consider the following notes:

– Make sure the fluid bottle is clean and free from small bits of dirt.

– Clean the unit from time to time, especially if you use it in a built-in state/condition. Unscrew the unit with a suitable screwdriver and wipe it out carefully using a dry, fluff-free cloth.

– Should the vaporizer become clogged, please change as described in section 7.1.

– If the **Tiny CX** isn't in use for a long time, please take care that the fluid tube is emptied. Otherwise fluid drops could come out of the nozzle and make the surrounding wet and greasy.

– If the battery will not be used for a long time it must be recharged regularly (at least every six months).

8. Technical Data

Procedure	Vaporizing fog generator
Power requirement	70 Watt
Voltage	12 V battery
Warm up time	< 1 sec
Fluid tank capacity	50 ml
Fluid consumption	2.3 ml/min. at continuous output
Fogging time	programmable
Continuous output with battery	10 min.
Temperature control	Microprocessor
Control	Cable remote Radio remote
Dimensions (L x W x H)	25 x 5.3 x 5.5 cm
Weight incl. battery and fluid tank	approx. 650 g

Manufactured in Germany for:
Look Solutions GmbH & Co. KG • Bünteweg 33 • D - 30989 Gehrden • www.looksolutions.com

9. Warranty conditions

For the miniature fog machine **Tiny CX** Look' warranty is:

1. Free of charge, subject to the following conditions (No. 2 - 6) we will repair any defect or fault in the unit if it is caused by a proven factory fault and has been advised immediately after identification and within 24 months of delivery to the end user. Insignificant deviations of the regular production quality does not guarantee replacement rights, nor do faults or defects caused by water, wrong fog fluid, by generally abnormal environment conditions or Force Majeure.

2. Warranty Service will be done in the following way: Faulty parts will be repaired or replaced (our choice) with correct parts. Faulty units have to be returned to us or our service centres or to be sent to us or our service centres at customer's expense. The invoice and/or receipt showing the purchase date and the serial number has to come with the faulty unit, otherwise the repair will not be covered under warranty. Replaced parts become our property.

3. The micro vaporizer is a consummable part with limited lifetime. No warranty can be given on this part.
   The warranty for the battery is limited to six month from purchasing.

4. The customer loses all rights for warranty services if any repairs or adjustments are done to the units by unauthorized persons and/or if spare parts are used which are not approved by us. The right of warranty service is also lost if fluids other than the original "TINY-FLUID" have been used or if units are sent to us with full fluid bottles. Also non compliance with the instructions in this manual or mistakes by incorrect handling/treating of the machine will lead to a loss of warranty and also any faults and damages caused by undue force.

5. Any freight costs arrising in connection with the warranty services have to be born by the customer.

6. Warranty services do not cause an extension of the warranty time or the start of a new warranty period. The warranty for replaced parts ends with the guarantee time of the whole unit.

7. If a defect/fault can not be repaired by us in a satisfactory time, we will, within 6 months after sale of the unit, on choice of the customer, either:
   - replace the whole unit for free or
   - refund the lesser value or
   - take back the whole unit and refund the purchase price, but not more than the usual market price at the time of the refund.

8. Further claims, especially for damages, losses etc. outside the unit are excluded.

Other warranty regulations may be valid outside Germany. Please check with your dealer!
If you should send the unit for service, do not forget to remove any liquid from the fluid bottle.